TO-78 Mechanical and Layout Data

Package Outline Data

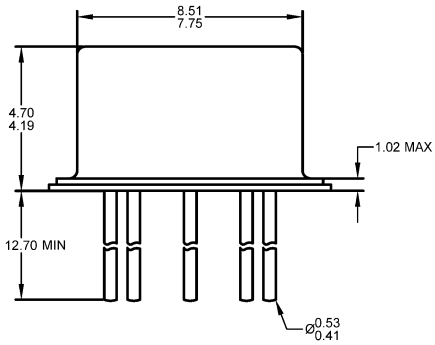

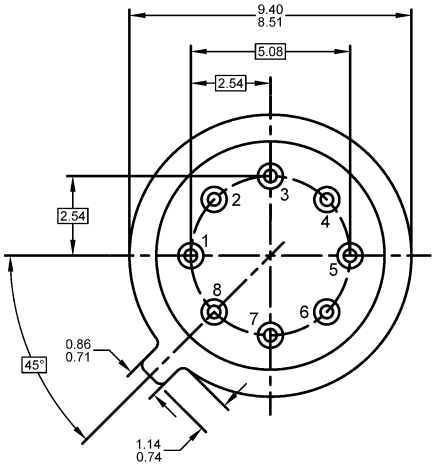

1. All linear dimensions are in millimeters.
2. Eight leaded device. Not all leads are shown in drawing views.
3. Some package configurations will not populate pin 8 and/or pin 7.
4. Package weight approximately 0.44 grams
5. Bulk product is shipped in standard ESD shipping material
6. Refer to JEDEC standards for additional information.

Suggested Through-Hole Layout

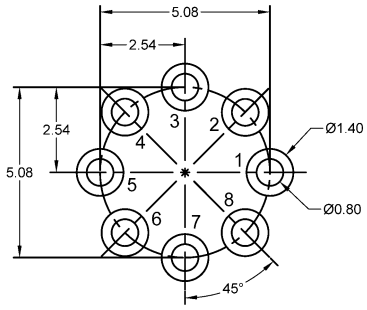

1. All linear dimensions are in millimeters.
2. The suggested land pattern dimensions have been provided as a straight lead reference only. A more robust pattern may be desired for wave soldering and/or bent lead configurations.

Disclaimer: It is the Buyers responsibility for designing, validating and testing the end application under all field use cases and extreme use conditions. Guaranteeing the application meets required standards, regulatory compliance, and all safety and security requirements is the responsibility of the Buyer. These resources are subject to change without notice.